Distributed Systems

Chapter 02: Architectures

Architectural styles

Basic idea

A style is formulated in terms of

- (replaceable) components with well-defined interfaces
- the way that components are connected to each other
- the data exchanged between components
- how these components and connectors are jointly configured into a system.

Connector

A mechanism that mediates communication, coordination, or cooperation among components. Example: facilities for (remote) procedure call, messaging, or streaming.

Layered architecture

Different layered organizations

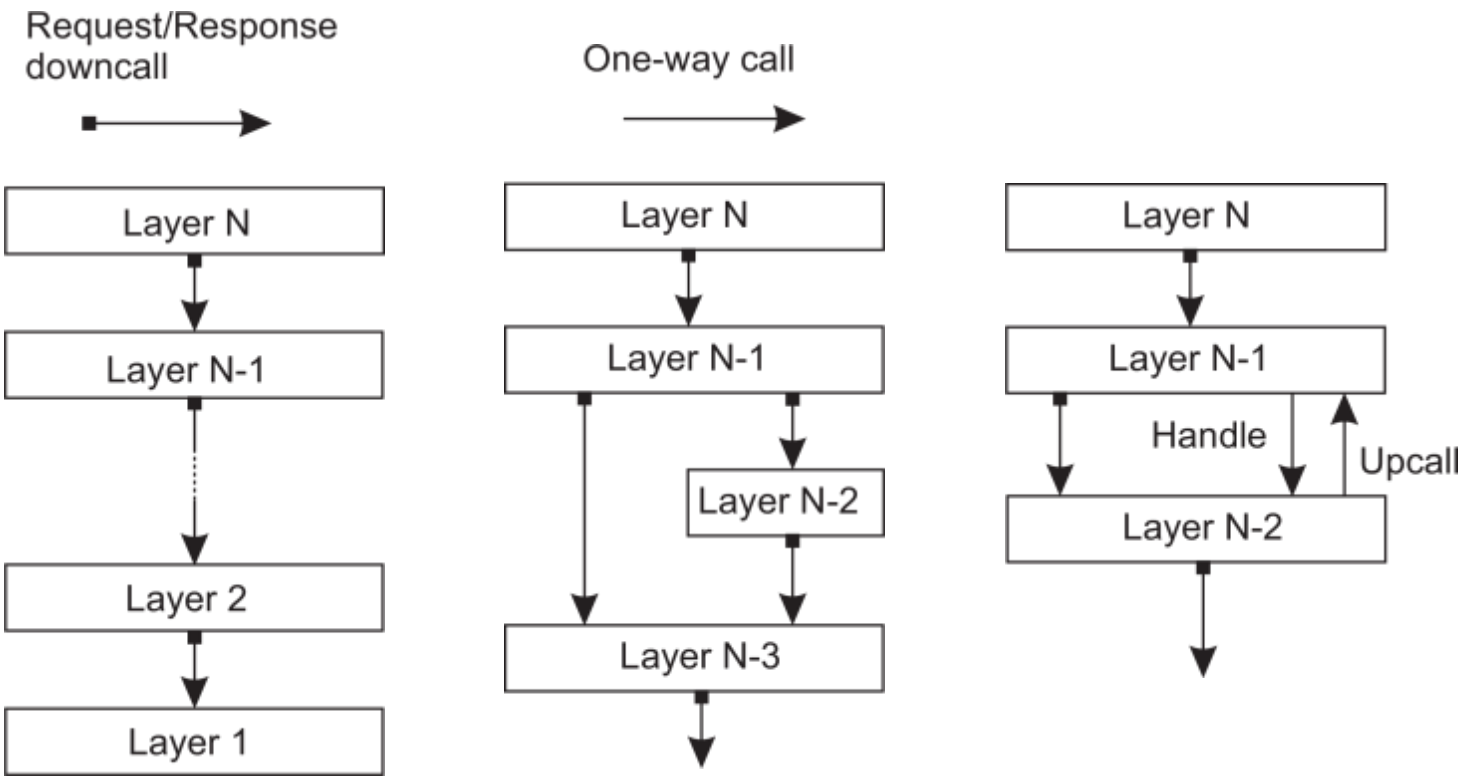

(a) (b) (c)

Application Layering

Traditional three-layered view

- Application-interface layer contains units for interfacing to users or external applications
- Processing layer contains the functions of an application, i.e., without specific data
- Data layer contains the data that a client wants to manipulate through the application components

Application Layering

Traditional three-layered view

- Application-interface layer contains units for interfacing to users or external applications
- Processing layer contains the functions of an application, i.e., without specific data
- Data layer contains the data that a client wants to manipulate through the application components

Observation

This layering is found in many distributed information systems, using traditional database technology and accompanying applications.

Object-based style

Essence

Components are objects, connected to each other through procedure calls. Objects may be placed on different machines; calls can thus execute across a network.

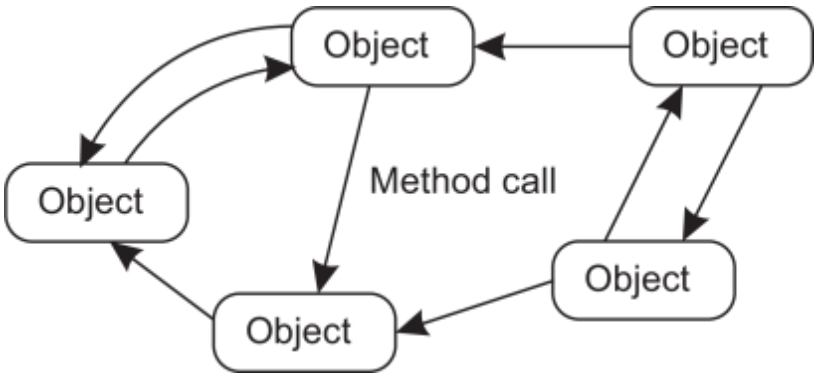

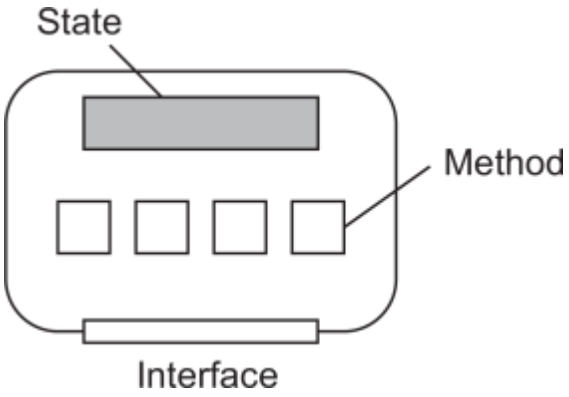

Encapsulation

Objects are said to encapsulate data and offer methods on that data without revealing the internal implementation.

RESTful architectures

Essence

View a distributed system as a collection of resources, individually managed by components. Resources may be added, removed, retrieved, and modified by (remote) applications.

١. Resources are identified through a single naming scheme
٢. All services offer the same interface
٣. Messages sent to or from a service are fully self-described
٤. After executing an operation at a service, that component forgets everything about the caller

Basic operations

Operation	Description
PUT	Create a new resource
GET	Retrieve the state of a resource in some representation
DELETE	Delete a resource
POST	Modify a resource by transferring a new state

Middleware: the OS of distributed systems

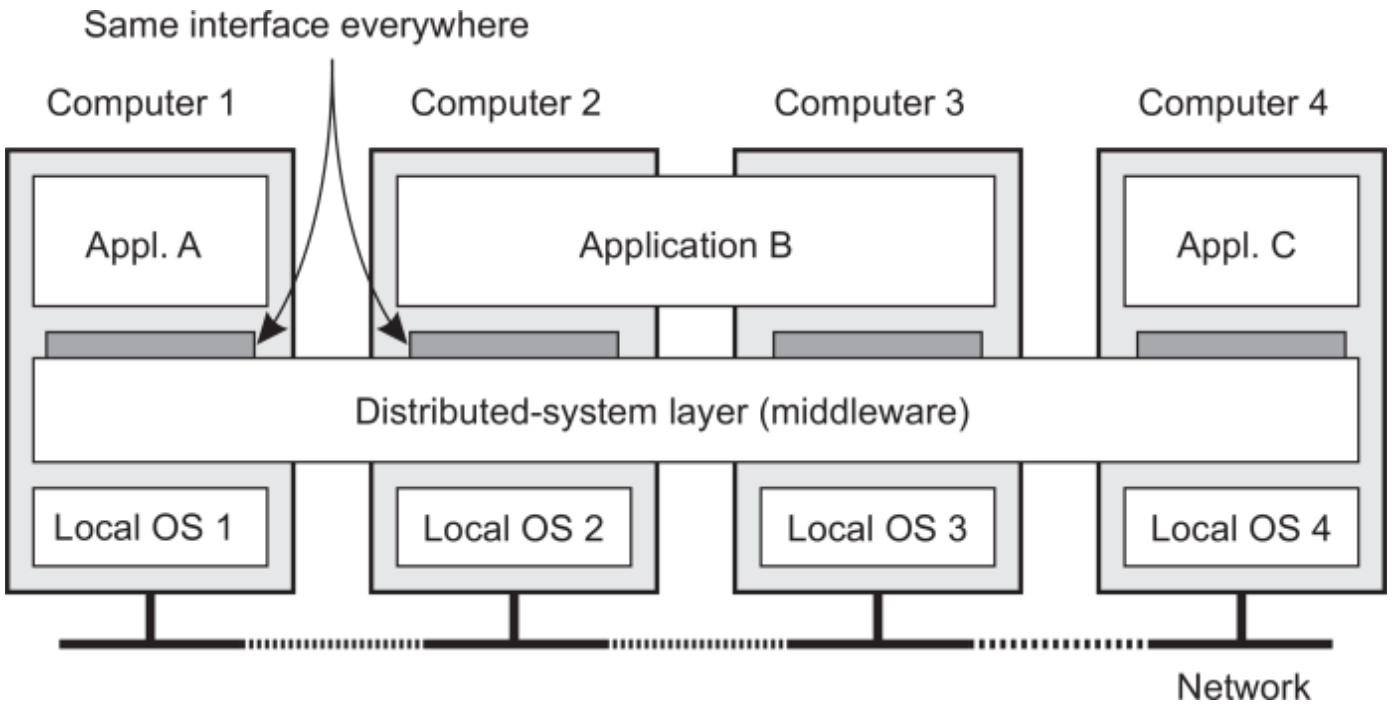

What does it contain?

Commonly used components and functions that need not be implemented by applications separately.

Using legacy to build middleware

Problem

The interfaces offered by a legacy component are most likely not suitable for all applications.

Solution

A wrapper or adapter offers an interface acceptable to a client application. Its functions are transformed into those available at the component.

Centralized system architectures

Basic Client–Server Model

Characteristics:

- There are processes offering services (servers)
- There are processes that use services (clients)
- Clients and servers can be on different machines
- Clients follow request/reply model regarding using services

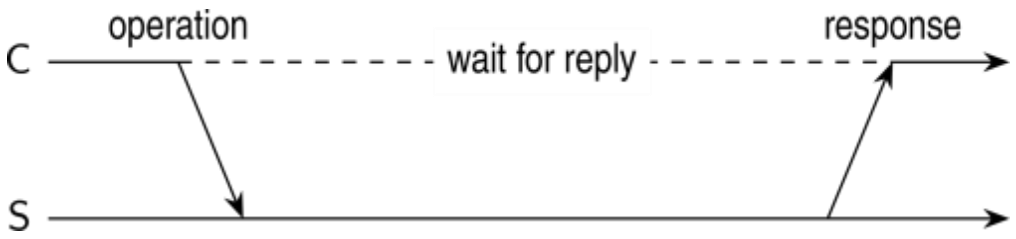

Multi-tiered centralized system architectures

Some traditional organizations

- Single-tiered: dumb terminal/mainframe configuration
- Two-tiered: client/single server configuration
- Three-tiered: each layer on separate machine

Traditional two-tiered configurations

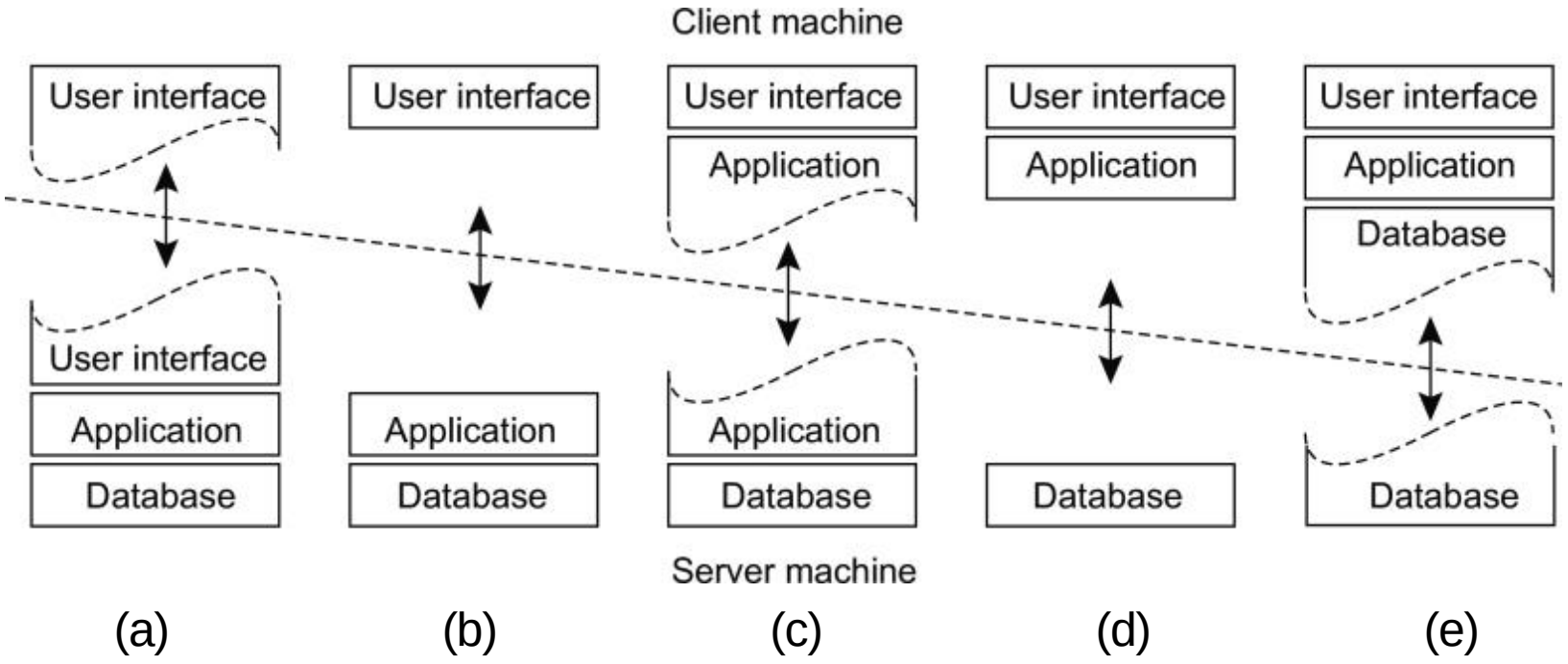

Being client and server at the same time

Three-tiered architecture

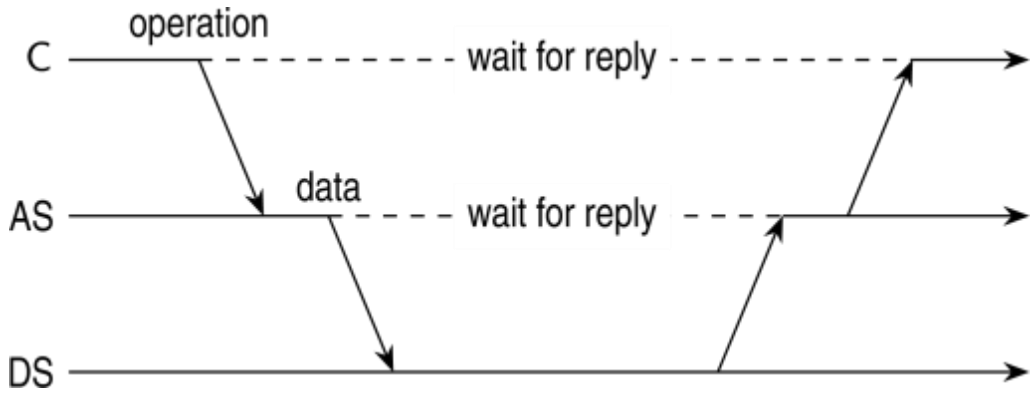

NFS architecture

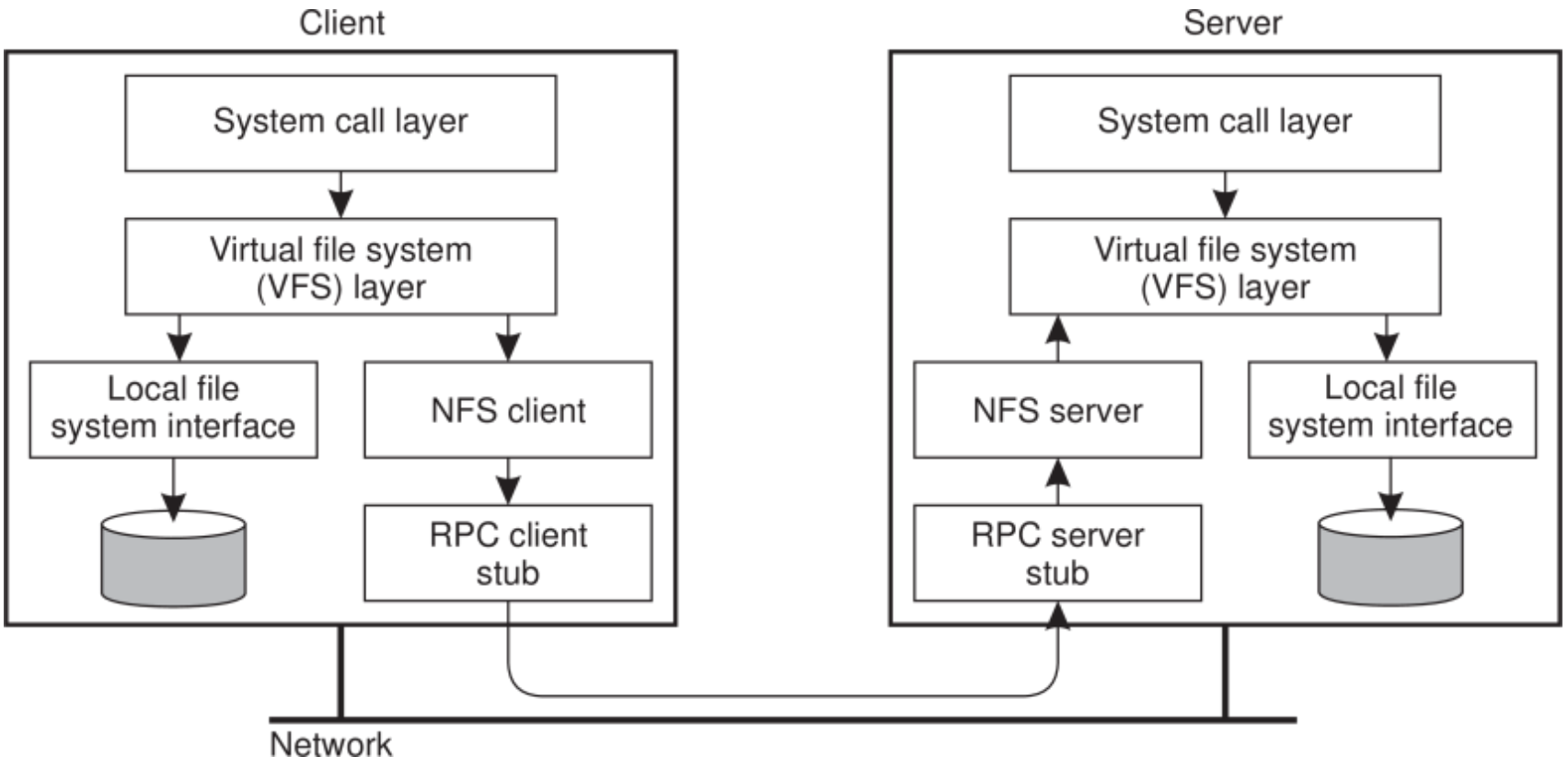

Edge-server architecture

Essence

Systems deployed on the Internet where servers are placed at the edge of the network: the boundary between enterprise networks and the actual Internet.

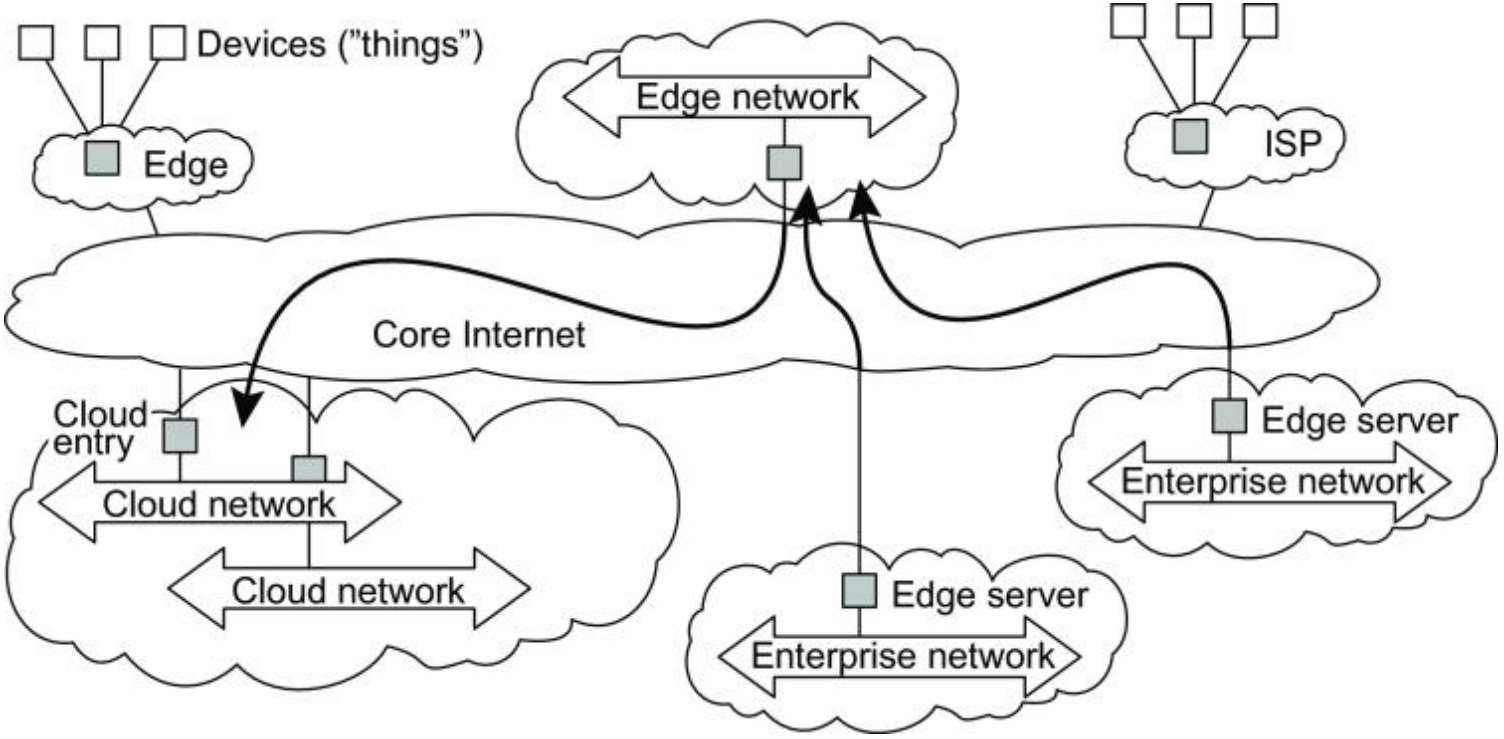

Reasons for having an edge infrastructure

Commonly (and often misconceived) arguments

- Latency and bandwidth: Especially important for certain real-time applications, such as augmented/virtual reality applications. Many people underestimate the latency and bandwidth to the cloud.
- Reliability: The connection to the cloud is often assumed to be unreliable, which is often a false assumption. There may be critical situations in which extremely high connectivity guarantees are needed.
- Security and privacy: The implicit assumption is often that when assets are nearby, they can be made better protected. Practice shows that this assumption is generally false. However, securely handling data operations in the cloud may be trickier than within your own organization.

Blockchains

Principle working of a blockchain system

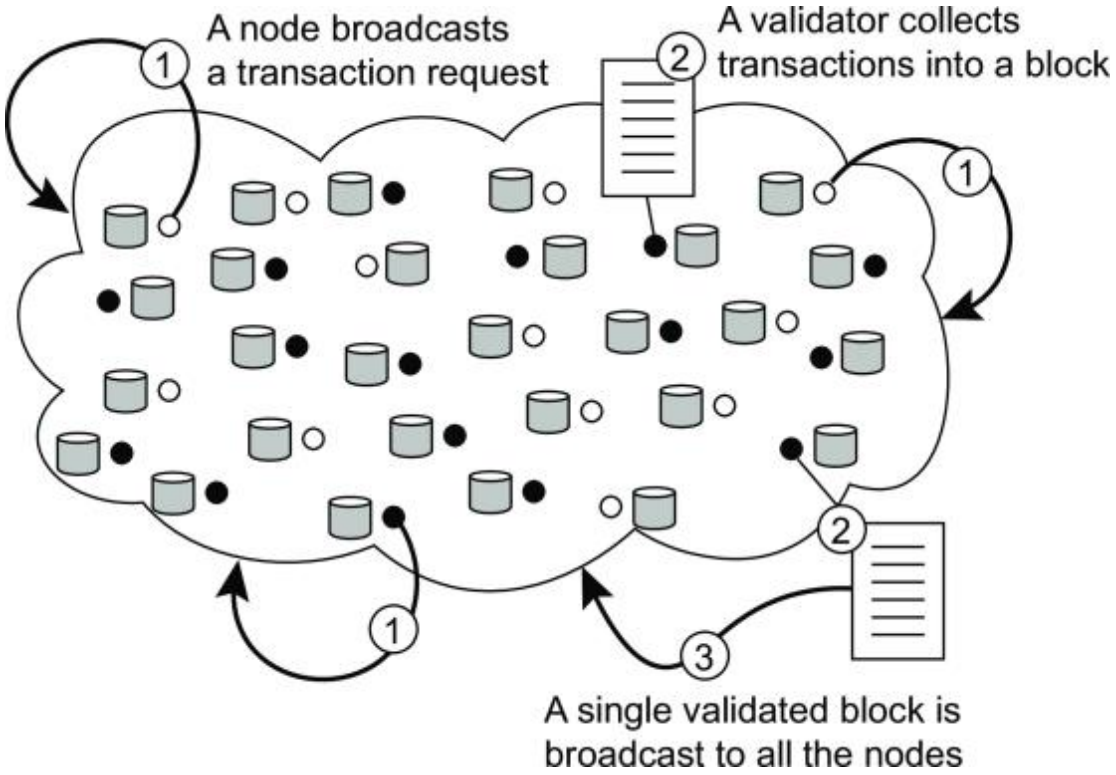

Observations

- Blocks are organized into an unforgeable append-only chain
- Each block in the blockchain is immutable ⇒ massive replication
- The real snag lies in who is allowed to append a block to a chain

Appending a block: distributed consensus

Centralized solution

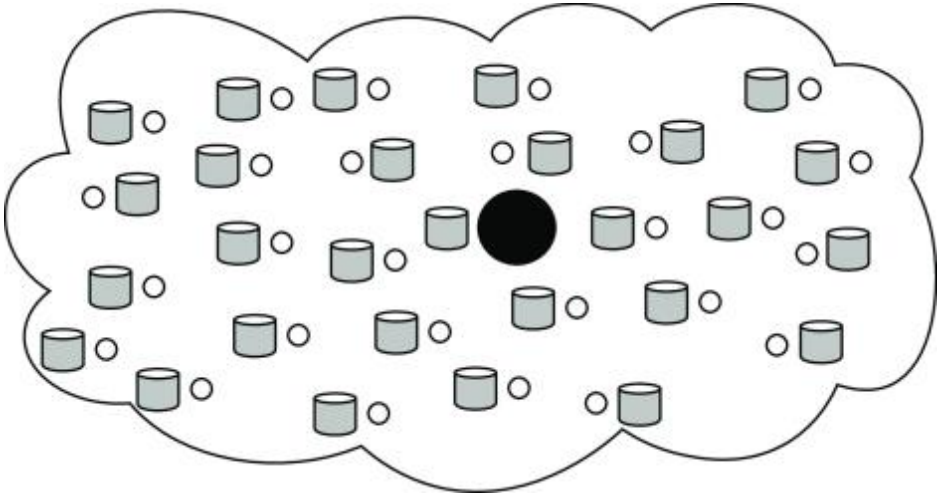

Observation

A single entity decides on which validator can go ahead and append a block.

Does not fit the design goals of blockchains.

Appending a block: distributed consensus

Distributed solution (permissioned)

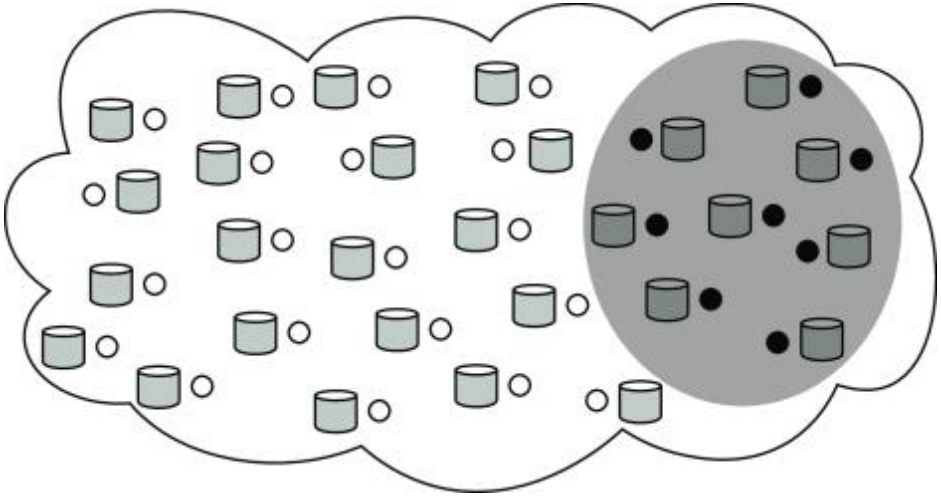

Observation

- A selected, relatively small group of servers jointly reach consensus on which validator can go ahead.
- None of these servers needs to be trusted, as long as roughly two-thirds behave according to their specifications.
- In practice, only a few tens of servers can be accommodated.

Appending a block: distributed consensus

Decentralized solution (permisionless)

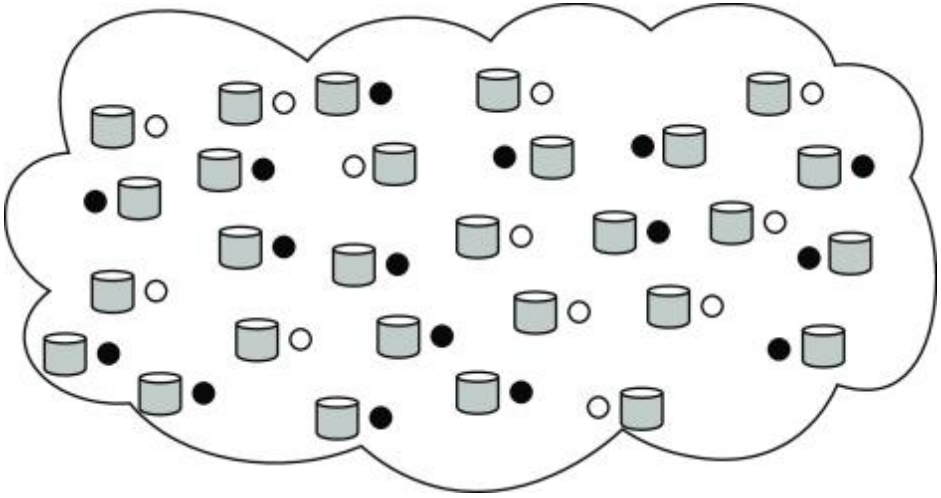

Observation

- Participants collectively engage in a leader election. Only the elected leader is allowed to append a block of validated transactions.
- Large-scale, decentralized leader election that is fair, robust, secure, and so on, is far from trivial.